LAGARDE

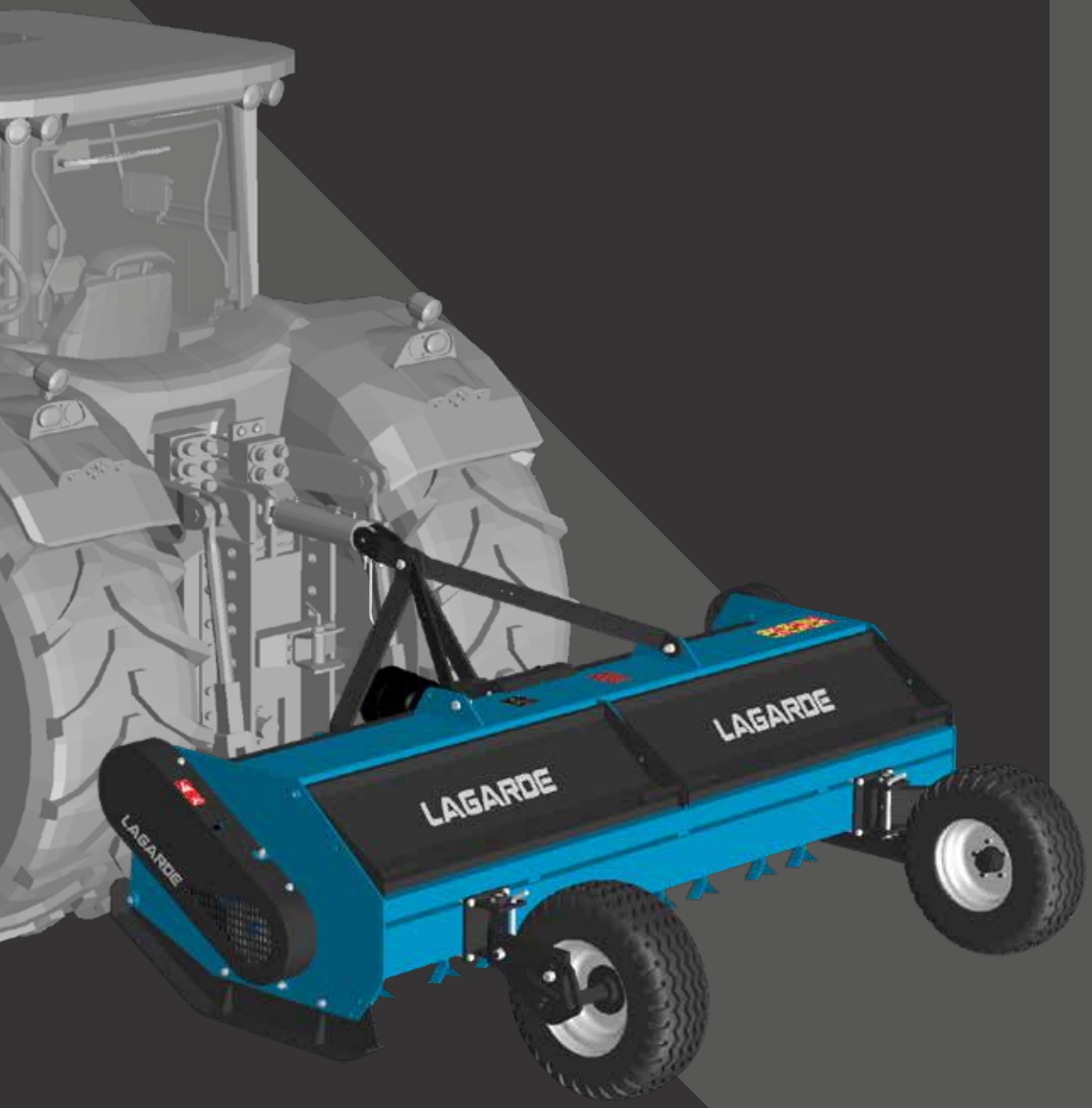

SX

CATEGORY: Agricultural
WORKING WIDTH (m): 2.80 - 4.80
FLAIL MOWER: Rear

MORE DETAILS
www.lagarde-sas.fr

THE RUGGED FLAIL MOWER FOR LARGE-SCALE FARMS

SX flail mowers are geared to the most demanding users, with their durable construction and innovative shredding technology.

THE STANDARD ESSENTIALS

- 260 HP gearbox with integrated free wheel
- Rugged body for enhanced reliability
- Massive rotor (Ø 60-mm shaft, Ø 273-mm tube rotor)
- Fine shredding thanks to high linear tool speed
- Excellent quality of updraft thanks to its many cutting heads
- Rounded and curved stubs hold the tools on the rotor
- Greater versatility thanks to all the interchangeable cutting heads
- Belt tensioning by pulley adjustment avoids back-pressure
- Bilateral shaft drive enhances torque distribution
- Semi-swivelling wheels
- Tool box

The options → rear roller, chain guards, HDX sheet metal linings, etc.

KINEMATICS

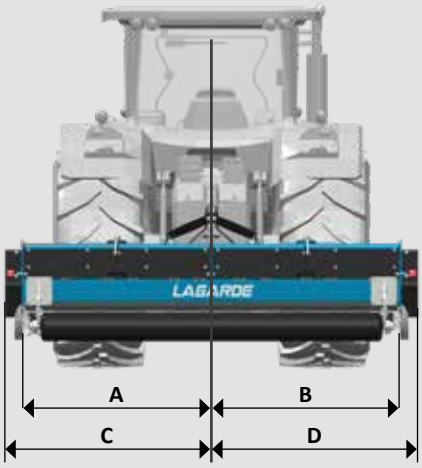

Widths in mm		SX 280	SX 320	SX 400	SX 480
Working	A	1400	1600	2000	2400
	B	1400	1600	2000	2400
Overall	C	1550	1750	2175	2575
	D	1550	1750	2175	2575

CHAIN GUARD

- Chain guard front optional for maximum protection on stony soil

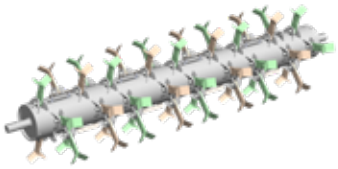

ROTOR & ROTOR BEARINGS

- Double helicoidal system rotor with high linear speed for strong updraft and excellent cutting quality
- Wide diameter tube rotor: Ø 273 mm
- Oversized bearings
- Baffle protection to prevent wire and twine clogging

TRANSMISSION

- 1000 rpm
- PTO shaft links gearbox with take-up units
- Use of Very High Performance (VHP) belts

Service life twice as long

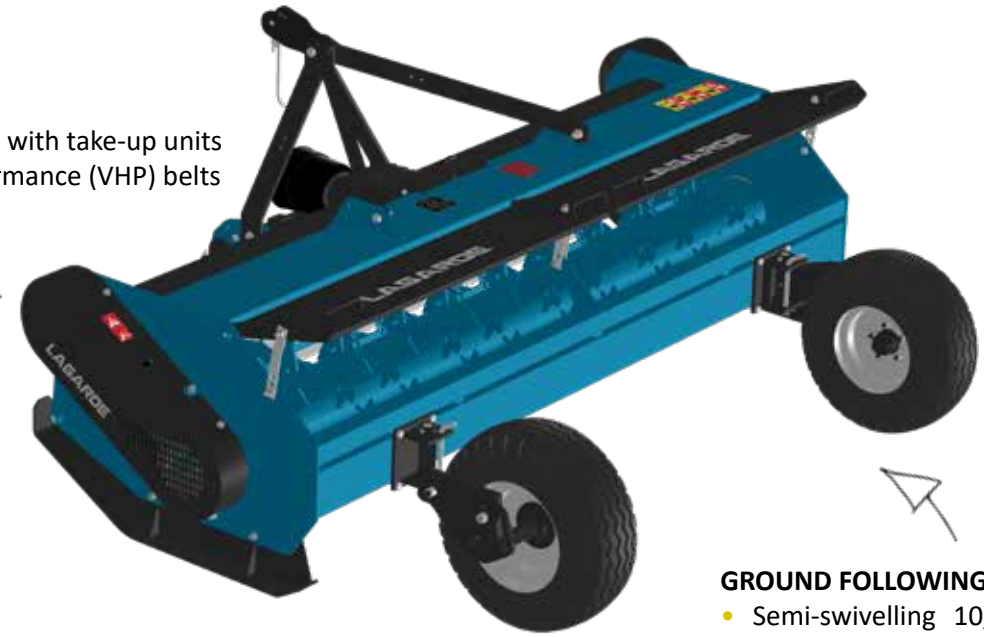

Service life three times as long

GROUND FOLLOWING

- Semi-swivelling 10/80x12 10-ply wheels and adjustable strengthened skids

WEAR PARTS

- Optional HDX sheet metal lining on body
- Optional HDX sheet metal lining on cover

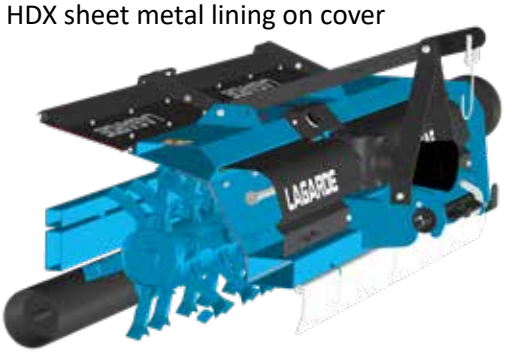

Optional Ø 273-mm roller

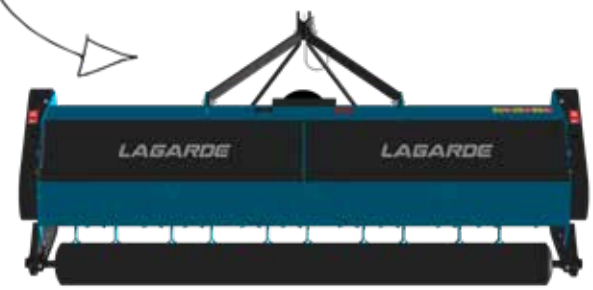

CUTTING HEADS

Scoop hammers

Y blades with transverse blades

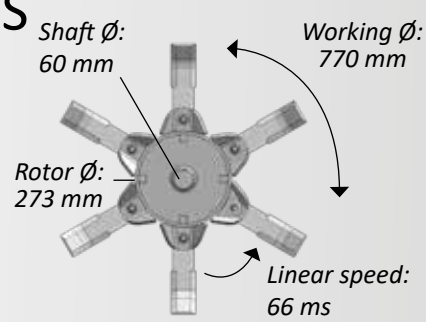

6 generator rotor

Y-blades with central pallets

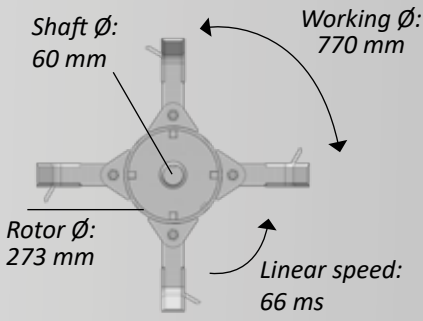

4 generator rotor

		SX 280		SX 320		SX 400		SX 480	
Dimensions	Working width (m)	2.80		3.20		4.00		4.80	
	Overall width (m)	3.08		3.50		4.35		5.15	
	Working Ø (mm)	770		770		770		770	
	Type of hitch	CAT 2, 3rd pivoting point				CAT 3, 3rd pivoting point			
	Hitch centring	Axial		Axial		Axial		Axial	
	Body structure	Body base 6 mm, side walls 10 mm, 3.2-mm bolted HDX sheet metal lining							
	Ground following	Semi-swivelling 10/80x12 10-ply wheels and adjustable strengthened skids							
	No. of wheels	2		2		2		3	
	Weight (kg)	1770		2050		2450		2800	
Cutting heads	No. of rotors	1		1		1		2	
	No. of generators on the rotor	4	6	4	6	4	6	4	6
	No. of Y blades	–	104	–	120	–	152	–	184
	No. Y-blades with central pallets	72 + 36	–	84 + 42	–	108 + 54	–	128 + 64	–
	No. of scoop hammers	–	52	–	60	–	76	–	92
Features	Gearbox	260 HP with integrated free wheel							
	Rotor rotation speed (rpm)	1650		1650		1650		1650	
	Linear speed of cutting heads (m/s)	66		66		66		66	
	Front protection	Projectile guards							
	Ejection of shredded matter	Opening rear cover Optional mulch scattering baffles with security beam							
	PTO (rpm)	1000		1000		1000		1000	
	PTO shaft	1'' 3/8, 6 splines, star tube							
	No. of belts	2x3		2x4		2x4		2x4	
	Required power (HP)	90		100		130		150	
Options	Vibration hour meter	●		●		●		●	
	Magnetic hour meter	○		○		○		○	
	Road signalling kit	○		○		–		–	
	Chain guards	○		○		○		○	
	Ø 273-mm roller	○		○		–		–	
	Spare wheel	○		○		○		○	
	Reinforced 10/65x16, 14-ply tyre	○		○		○		○	
	Potato wheel	○		○		○		○	
	Central wheel offsetting beam	–		–		○		○	
	Rear baffle and security roll-bar	○		○		○		○	
	Lengthwise transport and road signalling kit	–		–		○		○	
	CAT 3 coupling bar	○		○		●		●	

● Standard – Not available ○ Optional

Equipment designed to last

LAGARDE - 65 Avenue de Tréville - 64130 Mauléon Licharre
Tél : +33 5 59 19 20 10 - Fax : + 33 5 59 19 20 11 - contact@lagarde-sas.fr

LAGARDE

Your LAGARDE dealer